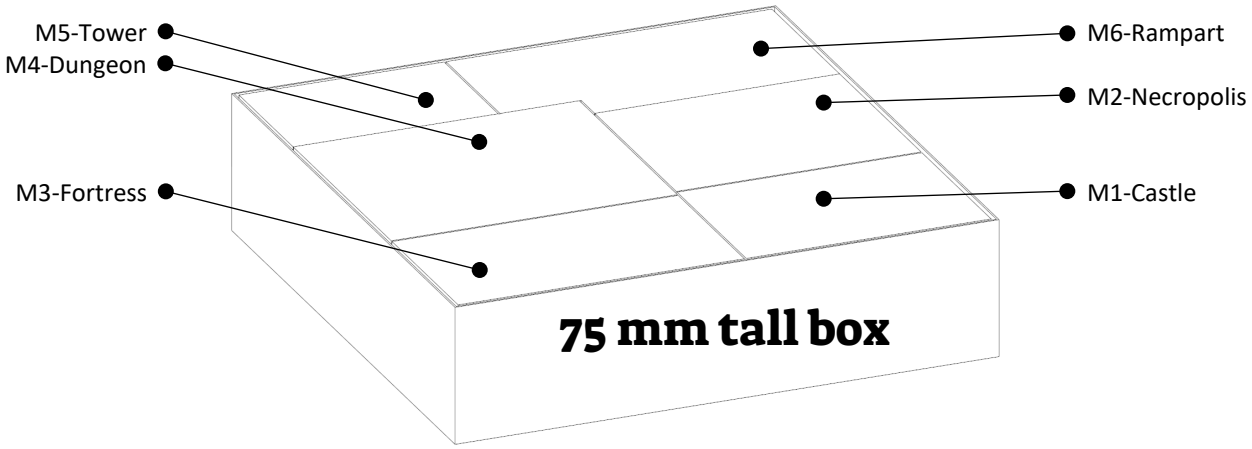

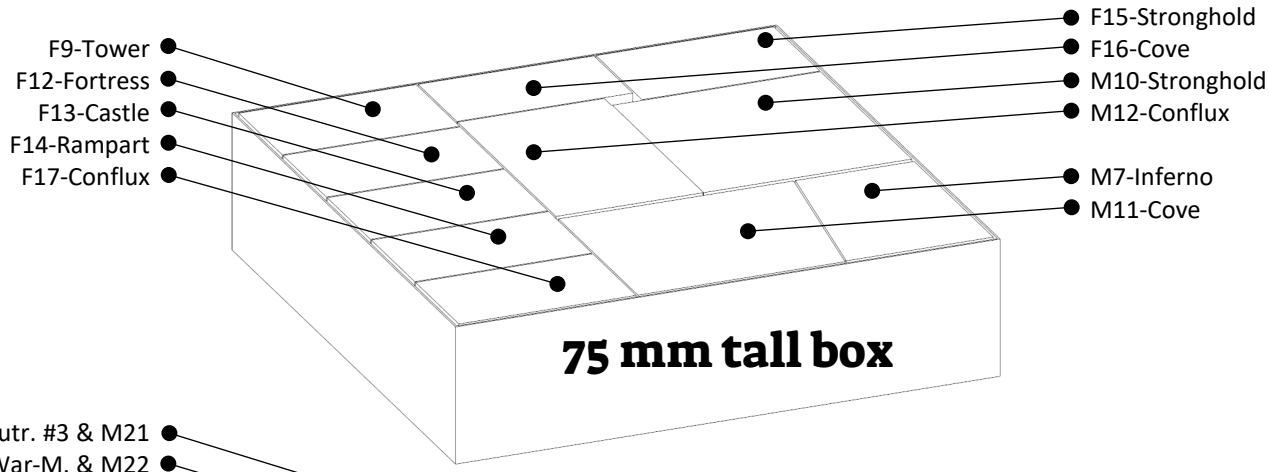

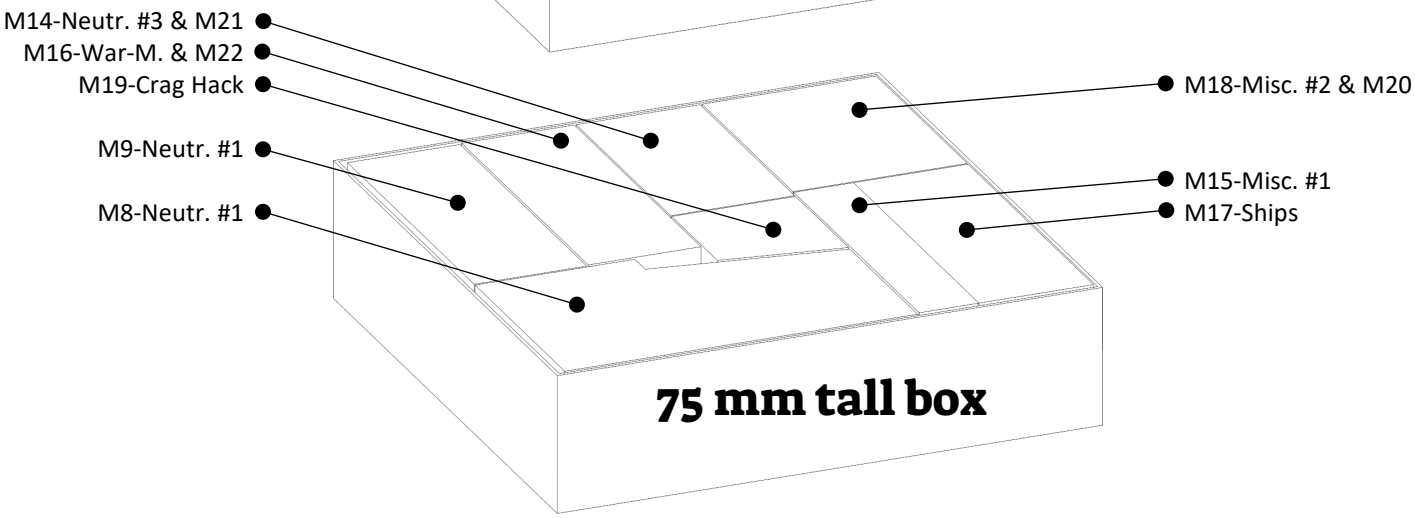

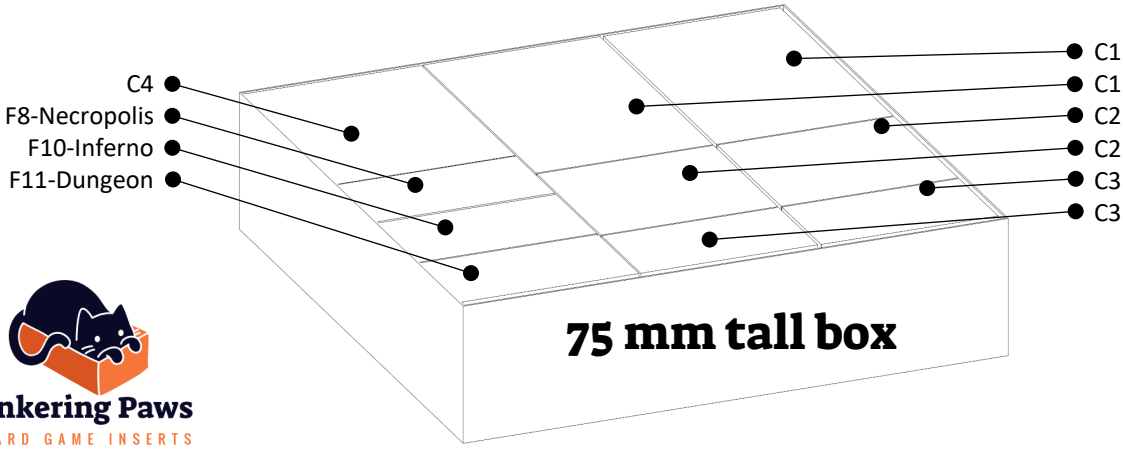

Tinkering Paws
BOARD GAME INSERTS

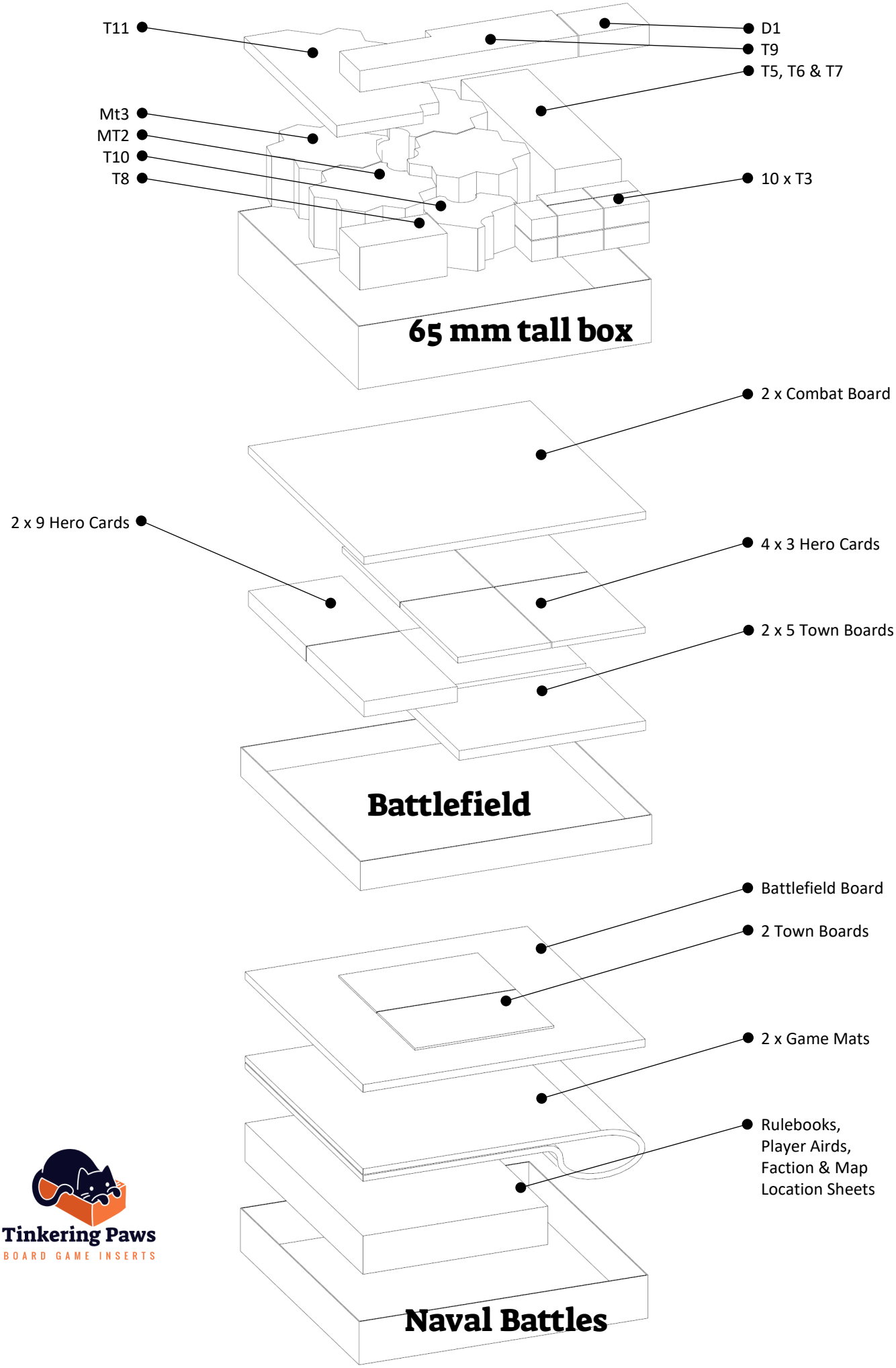

Tinkering Paws
BOARD GAME INSERTS